Series Ars

Shower column with shower head and 3-functional shower handset

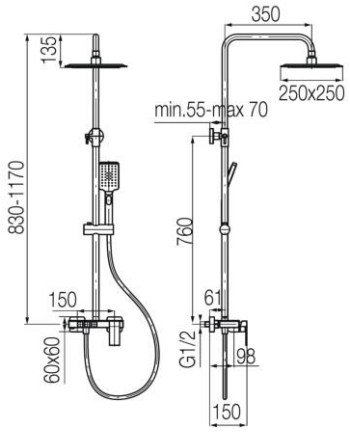

Code	Flow class	EAN13
2420150	A/A/A	5902273557562

Product usage:
For use in with cold and hot water systems in buildings

Type:
Shower sets

Guarantee:
5-year

Technical data/Operating parameters:
Max pressure: 1,0 MPa,
Max temperature: 90°C

Used materials:
brass, ABS copolymer

Finish:
chrome